SUSPENSION, REAR SHOCK INTERNALS - Z26NEY99A4/B4/A6/B6 (7046373)

2026 RZR - RZR XP S 1000 ULTIMATE (R01) - Z26NEY99A4/B4/A6/B6

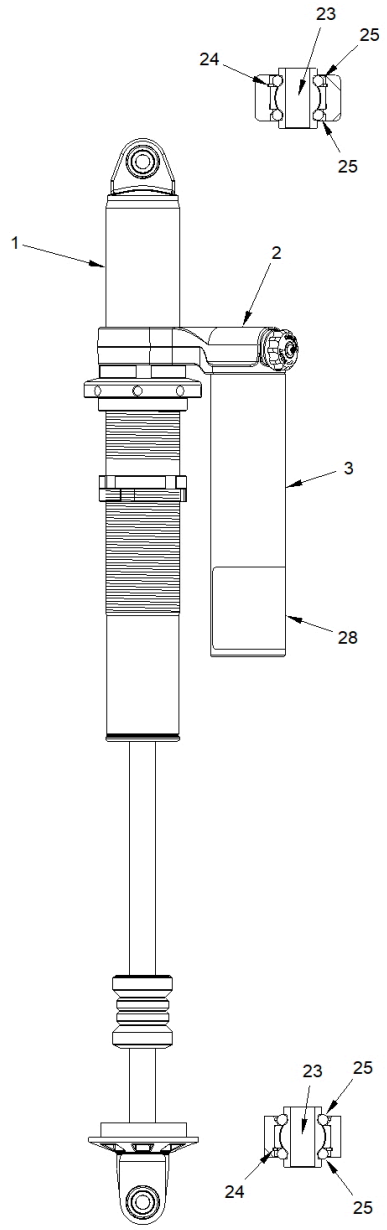

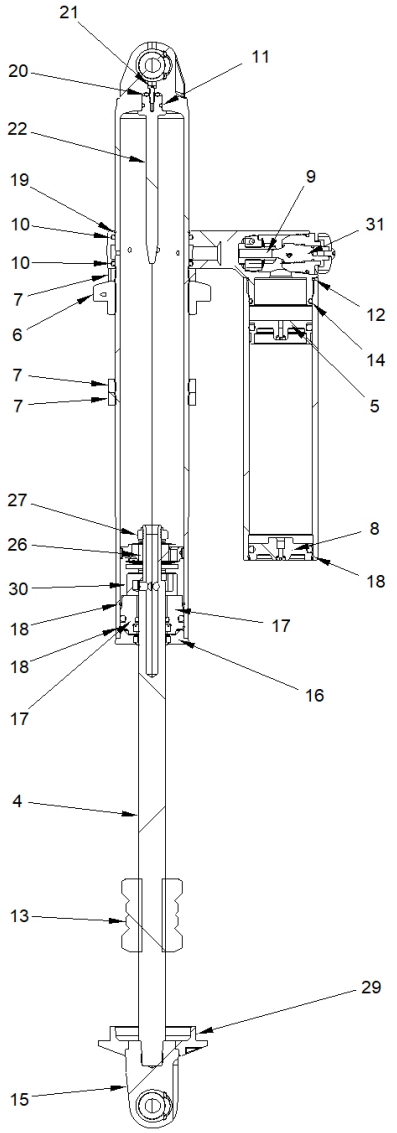

© 2025 Polaris Industries Inc.

7046373

Reference #	Part#	Description	Quantity
	7046373	SHOCK-REAR,LH [INCLUDES 1-32]	2
	7046374	SHOCK-REAR,RH [INCLUDES 1-32]	2
1	-------	BODY-SHOCK,2.5",19.265L	1
2	-------	BRIDGE,2.5 WER ADJUSTER,FORGED,EXT	1
3	-------	2.5IN 9.5L PBRES CAN WR(ANODIZE HARD CLEAR)	1

4	-------	SHAFT-NEEDLE .875 X 18.162L	1
5	-------	ASM-IFP,2.5',TYP III CLR	1
6	-------	2.5IN SPRING NUT	1
7	-------	2.5IN CROSSOVER RING/JAM NUT	3
8	-------	END CAP ASSY-2.5,WIRE RING BULIT IN CHARGE PORT	1
9	-------	VALVE,CHECK ASSEMBLY	1
10	-------	O-RING 2-230	2
11	-------	O-RING 2-112	1
12	-------	O-RING 2-033	1
13	-------	2.50 BUMP STOP	1
14	-------	O-RING 2.225	1
15	-------	SHAFT LOOP, 1.0935 BORE,BRNG STEP,2.930L	1
16	-------	WIPER CAP ASM. 2.5PRESS FIT	1
17	-------	ASM. SEAL HEAD 2.5 X .875 PI	1
18	-------	ID RETAINING RING2.5"	1
19	-------	OD RETAINING RING,2.5"	3
20	-------	O-RING 2.202	1
21	-------	#8-32 X.500LOW HEAD SCREW	1
22	-------	NEEDLE,1 PIECE PRESS IN	1
23	-------	BEARING-SPHRL,12MM16.8DEG	1
24	-------	RETAINING RING FOR 1.0625 BORE	2
25	-------	O-RING 2-312	4
26	-------	ASM-PSTN,2.5",7046373	1
27	-------	NUT,FLEXLOC,THIN, 5/8-18	1
28	-------	DECAL-SHOCK,7046373	1
29	1501211	RETAINER-SPRING,2.5"	1
30	-------	CHECKVALVE-3PORT,.72L,2X.086	1
31	-------	ASM-SS RETENTION NUT	1

Copyright 1996-2026 Polaris Industries U.S.A All rights reserved.